REGAL
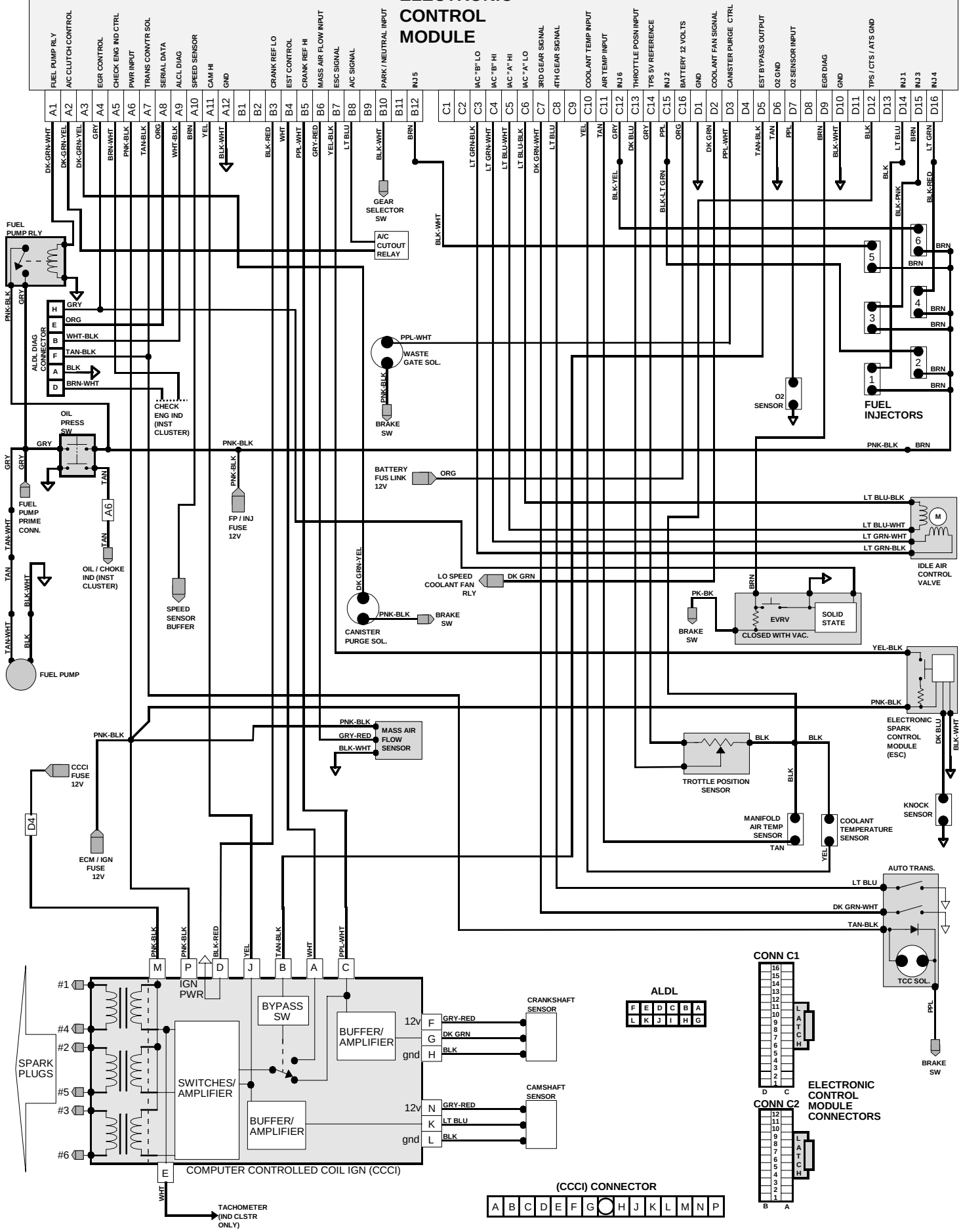
TURBO ELECTRONIC CONTROL MODULE